AXDSPL-HN3
INSTALLATION INSTRUCTIONS

INTERFACE COMPONENTS

- AXDSPL-HN3 interface
- AXDSPL-HN3 interface harness
- Amplifier bypass harness (integrated)

www.MetraOnline.com

MetraOnline.com may be used to assist with dash assembly instructions. Simply enter your Year, Make, Model vehicle into the vehicle fit guide and look for the Dash Kit Installation Instructions.

Honda **DSP Interface With Amp Bypass Harness**
2016–2022

Visit AxxessInterfaces.com for more detailed information about the product and up-to-date vehicle specific applications.

INTERFACE FEATURES

- Includes a DSP (Digital Signal Processor)
- 15 Band graphic EQ
- 4 inputs and 6 individually assignable outputs
- Independent equalization for front, rear, and sub
- Selectable low pass, band pass, and high pass filters
- Selectable crossover slopes; 12db, 24db, 36db, 48db
- Each channel can be delayed independently up to 10ms
- Clipping detection and limiting circuits
- Designed for amplified models
- Includes an amp bypass harness
- Internal header port for adding interface modules
- Retains level control of subwoofer through the factory radio
- Settings adjusted via Bluetooth® in a smart device application (tablet or mobile phone), compatible with both Android and Apple devices
- Read, write, and store configurations for future recall
- Password protect feature available in the mobile app
- Micro-B USB updatable

TABLE OF CONTENTS

Connections....2
Installation....3
AXDSPL-BT Installation....4
AXDSPL-SP Installation....5
Mobile App....6-7
Specifications /Speaker Assignment QR code....8

TOOLS & INSTALLATION ACCESSORIES REQUIRED

- Crimping tool and connectors, or solder gun, solder, and heat shrink • Tape • Wire cutter
- Zip ties • Multimeter

Google Play Store

Apple App Store
iOS 12.1 or higher

ATTENTION: *With the key out of the ignition, disconnect the negative battery terminal before installing this product. Ensure that all installation connections, especially the air bag indicator lights, are plugged in before reconnecting the battery or cycling the ignition to test this product.*
NOTE: Refer also to the instructions included with the aftermarket radio.

© COPYRIGHT 2024 METRA ELECTRONICS CORPORATION

REV. 3/15/24 INSTAXDSPL-HN3

CONNECTIONS

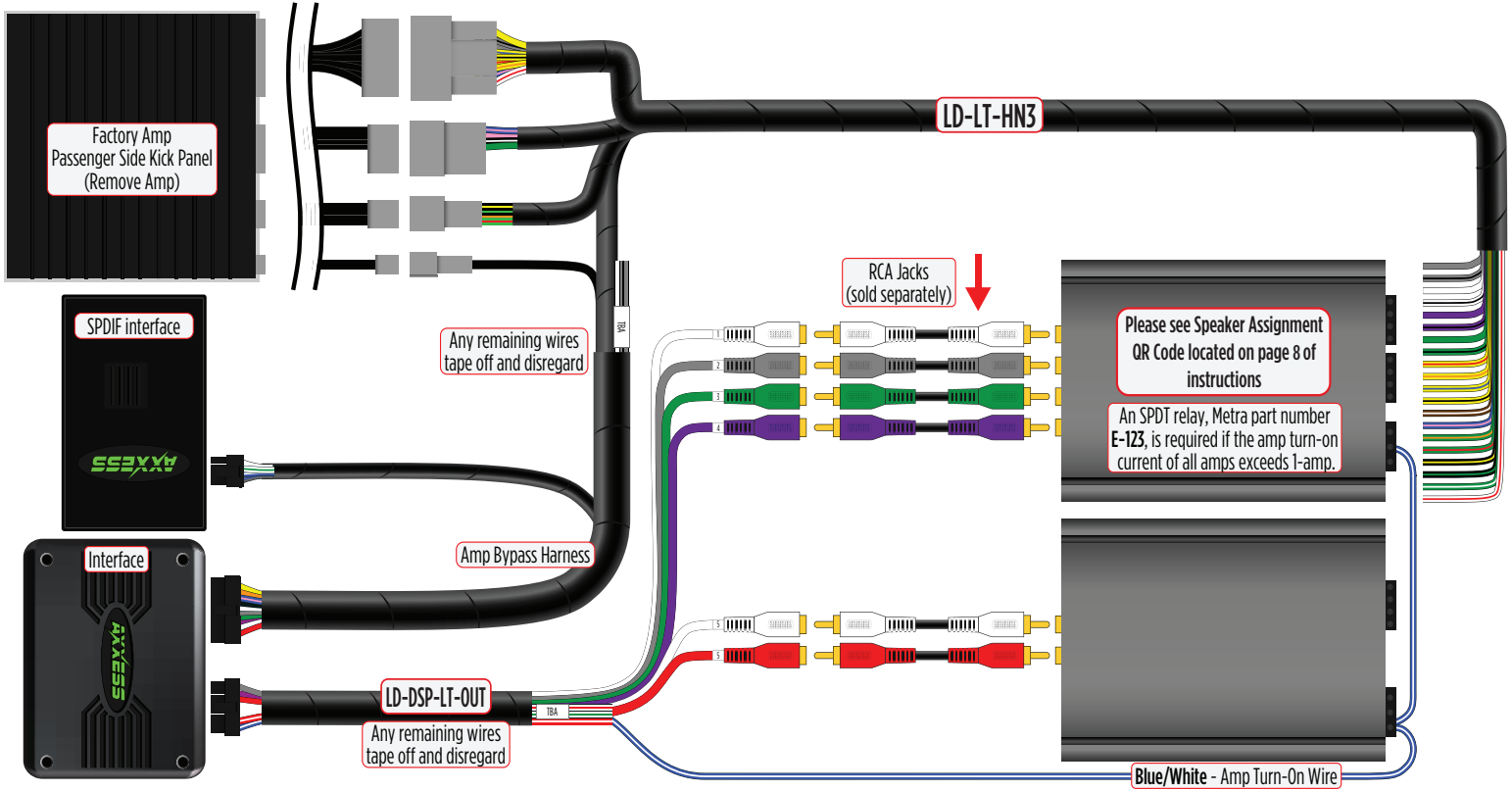

INSTALLATION

1. Locate the factory amp in the passenger side kick panel. Unplug and remove the amp.

2. Install the **AXDSPL-HN3 harness** and make all necessary connections, but leave the amp turn-on wire disconnected.

3. Plug the 20-pin and 16-pin connectors from the **AXDSPL-HN3 harness** into the **AXDSPL-HN3 interface**.

4. Download and install the AXDSP-XL app from the **Google Play Store** or **Apple App Store**.

5. Open the app and follow the instructions on the **Bluetooth Connection** tab to pair the mobile device to the AXDSPL-HN3. (Figure A)

6. Scroll to the **Configuration** tab then select the vehicle type. Press the **Lock Down** button to save the configuration. (Figure B)

7. Connect the amp turn-on wire from the **AXDSPL-HN3 harness**.

8. Click the **Identify** button to confirm that the AXDSPL-HN3 is connected properly. If so, a chime will be heard from the front left speaker or gauge cluster. Test all functions of the installation for proper operation.

9. Adjust the DSP settings in the app as desired. Refer to the instructions under the **Setup Instructions** tab, or online at Axxessinterfaces.com for an explanation of each tab in the app.

‡ Anytime the interface is locked down the key must be cycled off then back on

Note: The interface provides a 12-volt 1-amp output to turn on aftermarket amp(s). If installing multiple amps, an SPDT automotive relay will be required if the amp turn-on current of all amps combined exceeds 1-amp. Use Metra part number E-123 (sold separately) for best results.

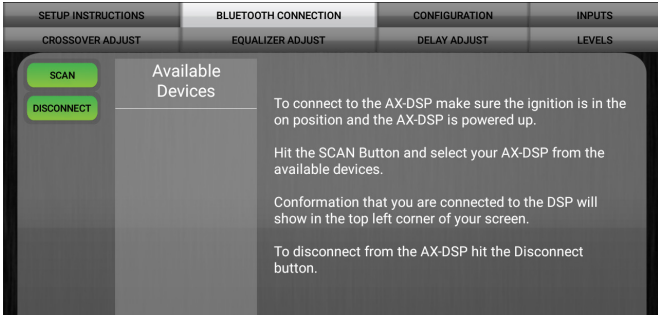

(Figure A)

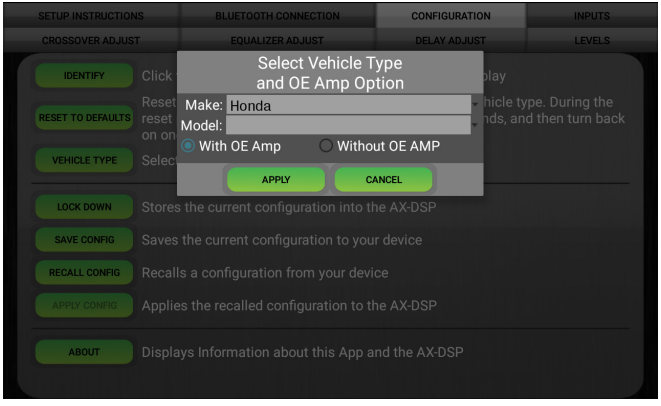

(Figure B)

BLUETOOTH STREAMING INTERFACE

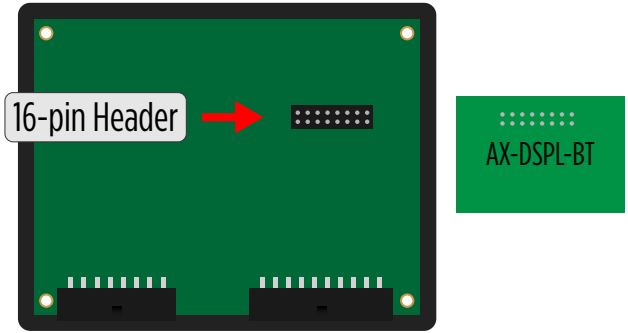

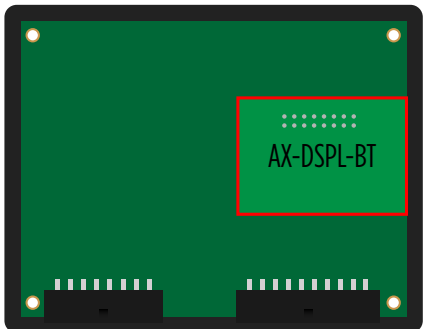

- The **AXDSPL-BT** Bluetooth streaming interface can be used to stream media directly to the interface.
- While streaming media the volume on the phone will be used. As an option, the **AXBK-1** (sold separately) can be used to control the volume.

1. **Important!** Unplug the interface from the vehicle.
2. Remove (4) Phillips screws securing the interface, then remove the top cover, exposing the circuit board within.
3. Locate the 16-pin header on the circuit board.
4. **Important!** Referencing how the **AXDSPL-BT** is laid out in the picture, carefully line up the header pins to the interface. Gently press down to secure.

   Note: Both interfaces may be damaged if installed wrong.
5. Reinstall the top cover to complete the installation.

TOSLINK DIGITAL OUTPUT

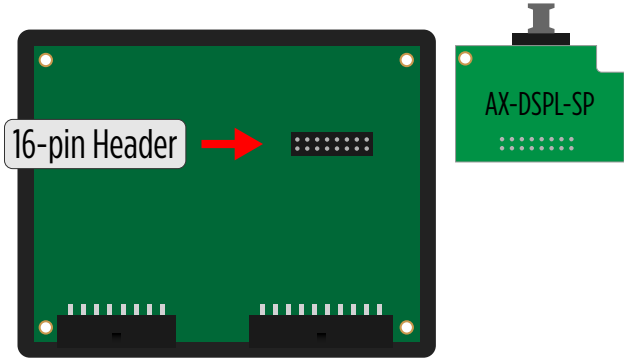

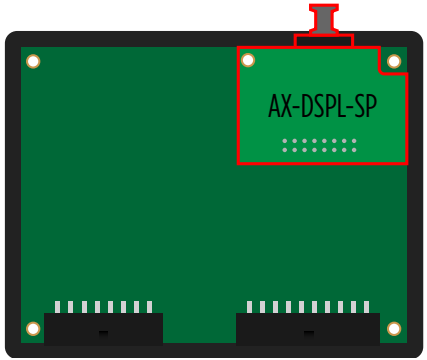

- The **AXDSPL-SP** Toslink digital output can be used for adding a digital output to the interface.

1. **Important!** Unplug the interface from the vehicle.
2. Remove (4) Phillips screws securing the interface, then remove the top cover, exposing the circuit board within.
3. Locate the 16-pin header on the circuit board.
4. **Important!** Carefully line up the header pins to the **AXDSPL-SP**, with the Toslink port facing outward. Gently press down to secure.

   Note: Both interfaces may be damaged if installed wrong.
5. Reinstall the top cover provided with the **AXDSPL-SP** to complete the installation.

QUICK SETUP STEPS THROUGH AXDSP-XL APP

Google Play Store

Apple App Store
iOS 12.1 or higher

1. Download and install the AXDSP-XL app from the **Google Play Store** or **Apple App Store**.
2. Turn Vehicle Ignition on. Make sure the Remote Turn on lead is disconnected.
3. Open the app: Select **Bluetooth Connections** page.
   - Select **Scan,** all available AXDSP devices within range will be displayed. Select your AXDSP and hit connect. (Figure A)
4. Select the Configuration page.
   - Select **Vehicle Type** Icon
   - Select the Vehicle Make: ____ (Example: **Hyundai**)
   - Select the Vehicle's model: ____ (Example: **Genesis**)
   - Select **With OE Amp**
   - Hit **Apply** (Figure B)
5. Make sure radio volume is all the way down.
6. Connect the amp turn-on wire from the **AXDSPL-HK3 harness** to the aftermarket amplifiers.

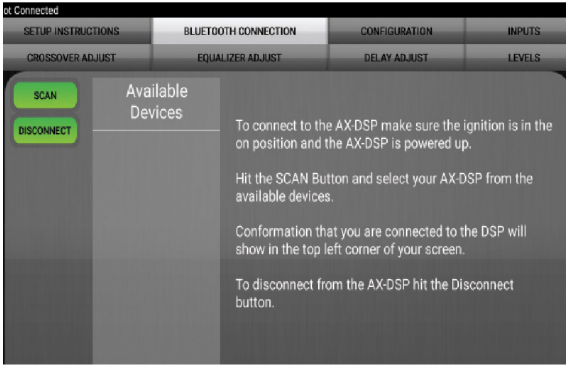

(Figure A)

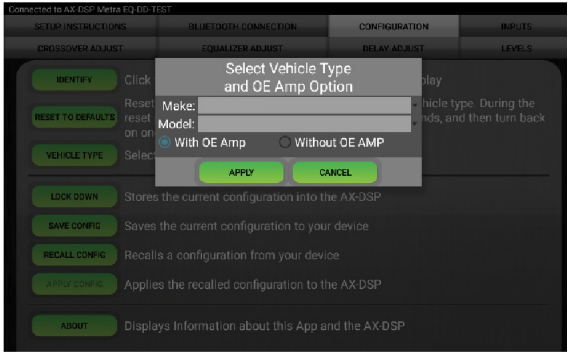

(Figure B)

7. From the **Configuration** page click the **Identify** button to confirm that the **AXDSPL-HK3** is connected properly. If so, a chime will be heard from the front left speaker.
8. Press the **Lock Down** button to save the configuration. (Do not turn ignition off until this process is completed) (Figure C)
9. Select the **Bluetooth Configurations** page and disconnect the DSPX.
10. Turn ignition off, close all door then lock vehicle using the key fob. The vehicle will need to sit uninterrupted for 10 minutes while the vehicle goes to sleep. (Make sure Key fob is 15 feet away from the vehicle)
11. Unlock Vehicle, turn ignition on and test radio's functions.
12. Adjust the DSP settings in the app as desired. Refer to the instructions under the **Setup Instructions** tab, or online at **Axxessinterfaces.com** for an explanation of each tab in the app.

Locking Down Data

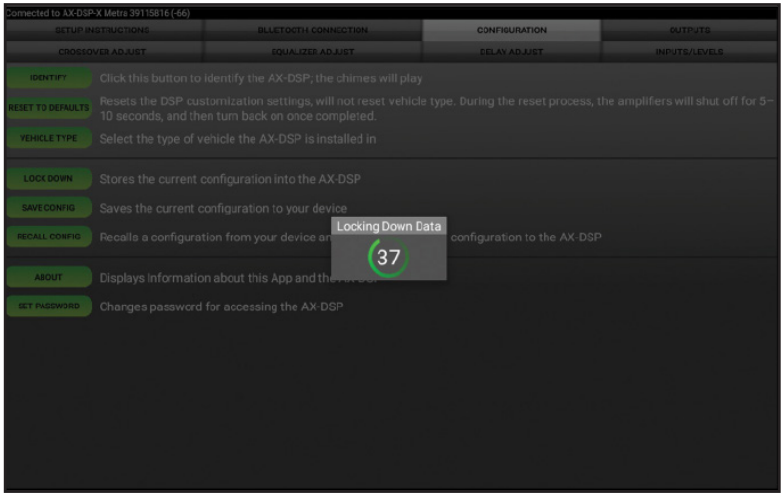

(Figure C)

Last and the most important:
You MUST lock down your configuration and cycle the key!!!

SPECIFICATIONS

Input Impedance	1M Ohm
Input Channels	6
Input Options	High Level or Low Level
Input Type	Differential balanced
Input Voltage (high level range)	0 - 28-volts (peak-to-peak)
Input Voltage (low level range)	0 - 4.9-volts (peak-to-peak)
Ouput Channels	6
Output Voltage	Up to 5-volts RMS
Output Impedance	50 Ohms
Equalizer Type	15 Band Graphic EQ, +/- 10dB
THD	<0.03%
Frequency Response	20Hz - 20kHz
Crossover Filter	Low pass, band pass, high pass
Crossover Frequency	Selectable 20hz to 20khz
Crossover Slope	12db/24db/36db/48db
Crossover Type	Linkwitz-Riley
Sampling	48kHz
S/N Ratio	105dB @ 5-volts RMS
Operating Voltage	10-16 volts DC
Standby Current Draw	7mA
Operation Current Draw	150mA
Adjustments/Controls	Application via Bluetooth
Remote Output	12 volts DC (signal sense or with ignition

Speaker Assignment

Visit AxxessInterfaces.com for more detailed information about the product and up-to-date vehicle specific applications

Having difficulties? We're here to help.

Contact our Tech Support line at:
386-257-1187

Or via email at:
techsupport@metra-autosound.com

Tech Support Hours (Eastern Standard Time)

Monday - Friday: 9:00 AM - 7:00 PM
Saturday: 10:00 AM - 5:00 PM
Sunday: 10:00 AM - 4:00 PM

Metra recommends MECP certified technicians

© COPYRIGHT 2024 METRA ELECTRONICS CORPORATION